W 24-2: Designed for hostile industrial environments

If the operating environment is particularly harsh or wet, the W 24-2 series of photoelectric switches ensures the required detection reliability. The photoelectric proximity switches feature high precision and high insensitivity to ambient light. The photoelectric switch and the through-beam photoelectric switch are impressive with their extremely long ranges. Some useful additional features extend the applications in specialist areas; e.g. the front screen heating prevents misting in rapidly changing ambient temperatures, the cooling plates allow application even for operating temperatures above 60°C, the dust shield with air purge ensures clarity in dusty areas and the weather hood ensures long life of the devices when used outdoors. User-friendliness, too, is highlighted by easy mounting and installation. The easily accessible terminal chamber facilitates the electrical connection, the rotatable plug connection adapts to the mounting situation.

Overview of W 24-2:

- Extremely robust metal housing for harsh industrial applications with IP 69K rating,
- Very long ranges and high precision, long scanning distance,
- High insensitivity to ambient light increases reliability and availability,
- Universal supply voltage offers flexibility,
- Useful additional functions and accessories for specialist applications.

Main industries:

- Automotive industry,
- Chemical industry,
- Storage and material handling,
- Steel industry.

◄ Used as muting sensors, WT 24-2 photoelectric proximity switches signal the entry of an industrial truck into a protected zone and clock the multibeam photoelectric safety switch.

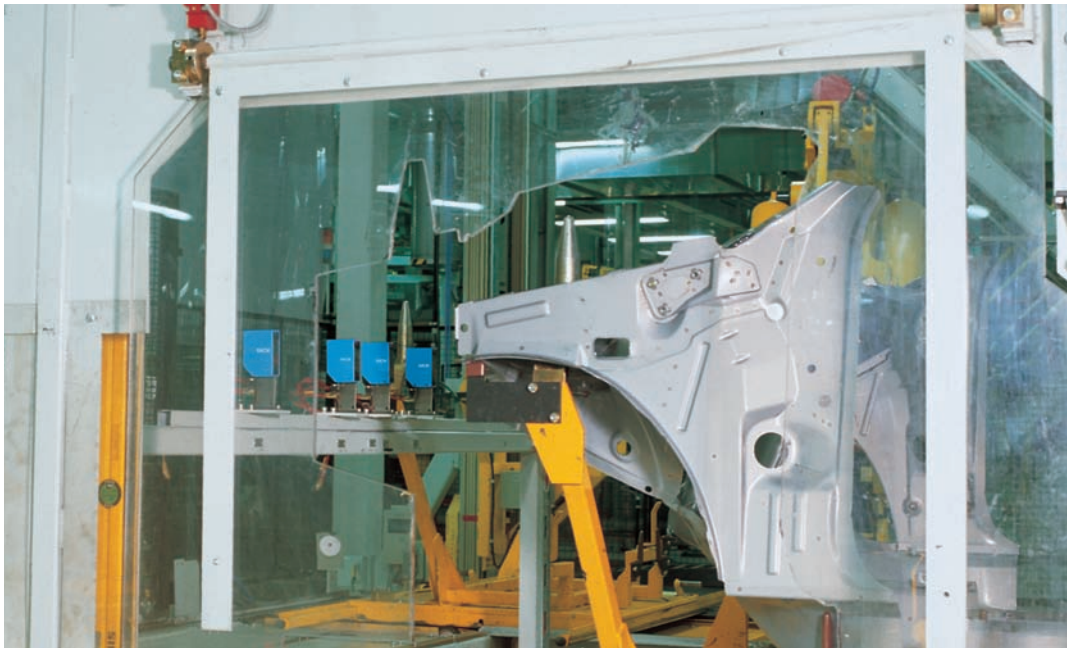

► Detection plus identification: WT 24-2 photoelectric proximity switches determine which body panels are to be placed on a conveyor belt.

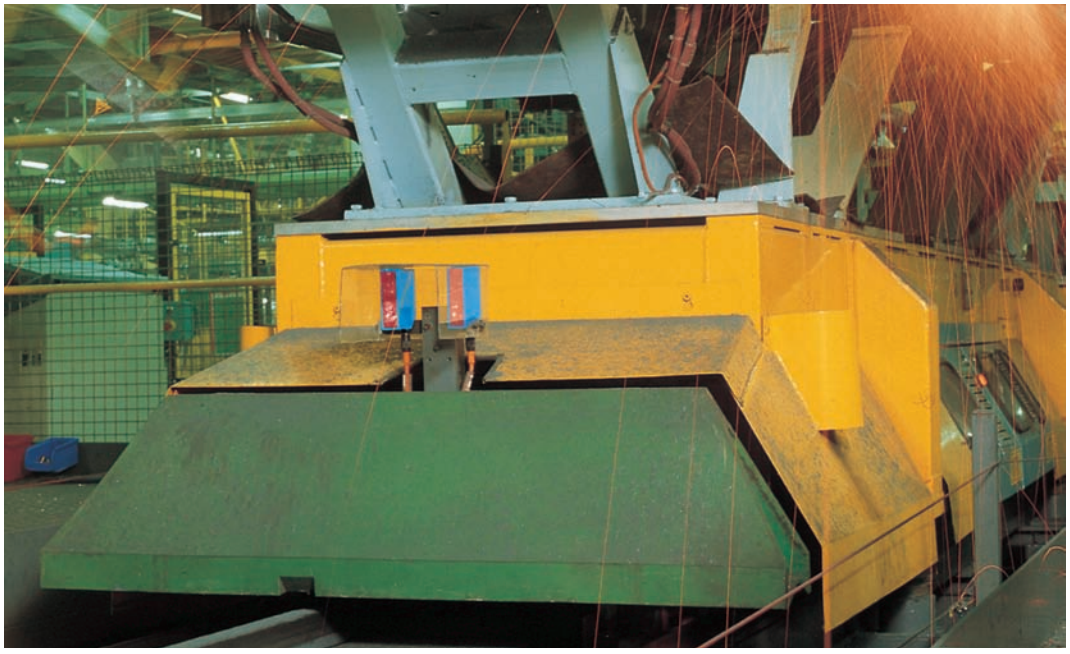

◄ Collision protection in a fully automatic welding system – made possible thanks to the insensitivity to ambient light of WT 24-2 photoelectric proximity switches.

Scanning distance 100...1200 mm

Photoelectric proximity switches

- Robust metal housing
- Red light
- Background suppression, with very precise adjustment
- M16 screw fixing rotatable by 90°
- Front lens heating, time delay and pre-failure signalling output

Dimensional drawing

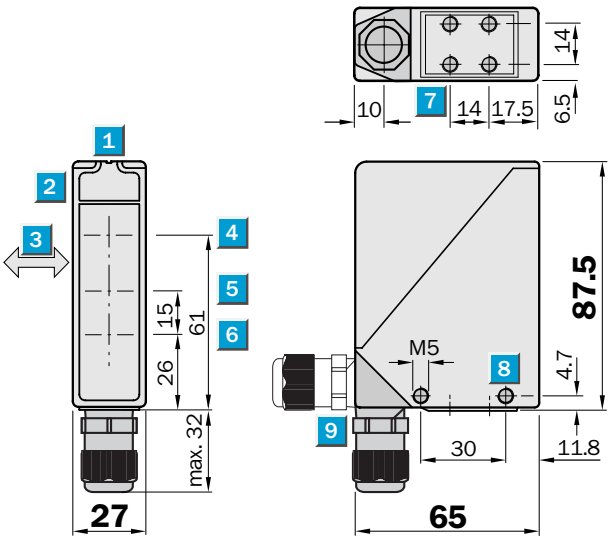

Adjustments possible

WT 24-2B 250	WT 24-2B 240
WT 24-2V 250	WT 24-2B 440
	WT 24-2V 540

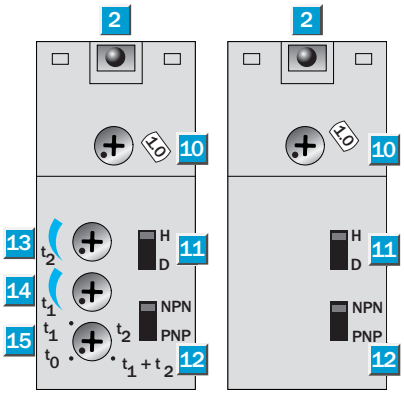

1. Alignment sight
2. LED signal strength indicator
3. Standard direction of the material being scanned
4. Centre of optical axis, sender
5. Centre of optical axis, receiver (close range)
6. Centre of optical axis, receiver (far range)
7. M5 threaded mounting hole, 6 mm deep
8. M5 threaded mounting hole, through-hole
9. M16 screw fixing and plug rotatable by 90°
10. Scanning distance adjustment
11. Light/dark selector
12. NPN/PNP selector
13. Time control t_2 = OFF-delay
14. Time control t_1 = ON-delay
15. Time delay selector switch

Connection types

WT 24-2B 240	WT 24-2V 250	WT 24-2B 440	WT 24-2V 540
WT 24-2B 250			

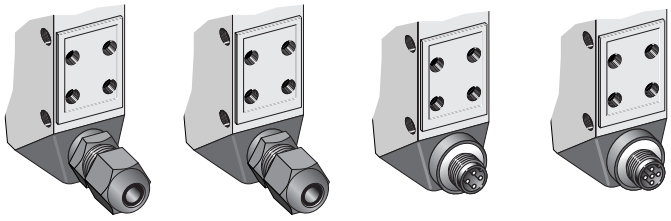

M16, terminals	M16, terminals	4-pin, M12	5-pin, M12
1 L+	1 L+	brn 1 L+	brn 1 L+
2 M	2 M	blu 3 M	blu 3 M
	3 Alarm	blk 4 Q/$\overline{Q}$	blk 4 Q/$\overline{Q}$
4 Q/$\overline{Q}$	4 Q/$\overline{Q}$		gra 5 Alarm
5 TE	5 TE	wht 2 TE	wht 2 TE

See chapter Accessories
Cables and connectors
Mounting systems
Special accessories

Technical data	WT 24-2	B 240	B 250	B 440	V 250	V 540
Scanning distance	100…1200 mm, adjustable	■	■	■	■	■
Light source[1], light type	LED, red light	■	■	■	■	■
Light spot diameter	Approx. 40 mm at 1200 mm	■	■	■	■	■
Supply voltage V_S	10…30 V DC[2]	■	■	■	■	■
Residual ripple[3]	< 5 V_{SS}	■	■	■	■	■
Current consumption[4]	≤ 50 mA	■		■		■
	≤ 70 mA, front lens heating		■		■	
Switching outputs	PNP or NPN, Q or $\overline{Q}$	■	■	■	■	■
Output current I_A max.	100 mA	■	■	■	■	■
Response time[5]	≤ 500 µs	■	■	■	■	■
Max. switching frequency[6]	1000/s	■	■	■	■	■
Pre-failure signalling output	Alarm, PNP				■	■
Time delay	Adjustable, 0.5…10 sec		■		■	
Test input "TE"	Sender switched off	■	■	■	■	■
Sender OFF	PNP or NPN: TE to 0 V	■	■	■	■	■
Connection type	M16 screw fixing	■	■		■	
	Plug			■		■
VDE protection class[7]	⧈	■	■	■	■	■
Circuit protection[8]	A, B, C	■	■	■	■	■
Enclosure rating	IP 67	■	■	■	■	■
Ambient temperature T_A	Operation – 40 °C…+ 60 °C	■	■	■	■	■
	Storage – 40 °C…+ 75 °C	■	■	■	■	■
Weight	Approx. 330 g	■	■	■	■	■
Front lens heating			■		■	
Housing material	Zinc die-cast housing	■	■	■	■	■

1) Average service life 100,000 h at T_A = + 25 °C
2) Limit values
3) May not exceed or fall short of V_S tolerances
4) Without load
5) Signal transit time with resistive load
6) With light/dark ratio 1:1
7) Reference voltage 50 V DC
8) A = V_S connections reverse-polarity protected
B = Output Q and $\overline{Q}$ short-circuit protected
C = Interference pulse suppression

Scanning distance

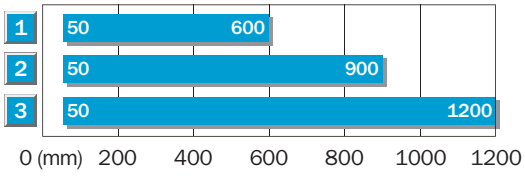

1	Scanning distance on black, 6% Remission
2	Scanning distance on gray, 18% Remission
3	Scanning distance on white, 90% Remission

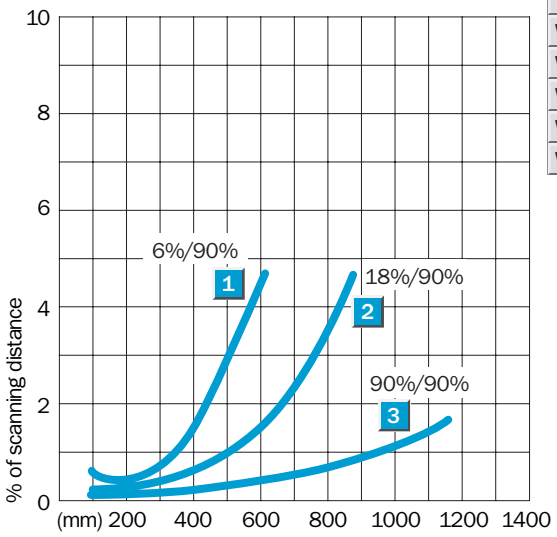

Order information

Type	Order no.
WT 24-2 B 240	1 017 813
WT 24-2 B 250	1 017 883
WT 24-2 B 440	1 016 934
WT 24-2 V 250	1 017 887
WT 24-2 V 540	1 017 888

Scanning distance 100...1200 mm

Photoelectric proximity switches

- Universal supply voltage
- Robust metal housing
- Red light
- Background suppression, with very precise adjustment
- M16 screw fixing rotatable by 90°
- Front lens heating and time delay

CE c UL us LISTED

See chapter Accessories

Cables and connectors

Mounting systems

Special accessories

Dimensional drawing

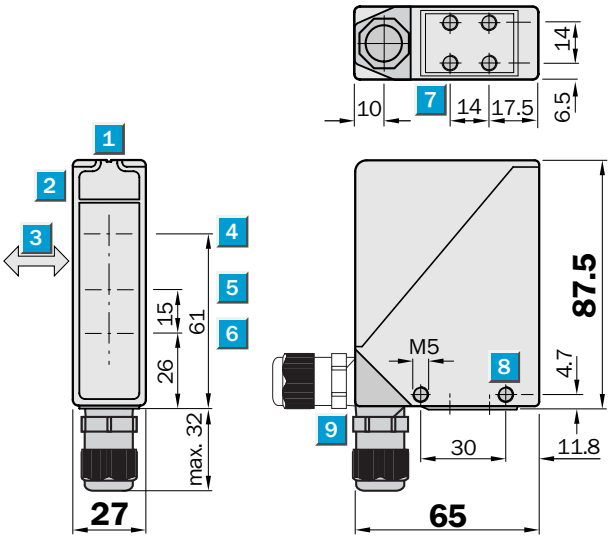

Adjustments possible

WT 24-2R 250 | WT 24-2R 240

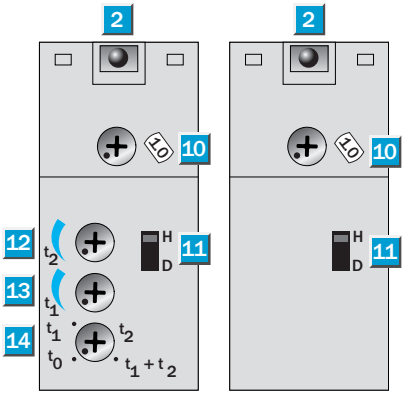

1 Alignment sight
2 LED signal strength indicator
3 Standard direction of the material being scanned
4 Centre of optical axis, sender
5 Centre of optical axis, receiver (close range)
6 Centre of optical axis, receiver (far range)
7 M5 threaded mounting hole, 6 mm deep
8 M5 threaded mounting hole, through-hole
9 M16 screw fixing rotatable by 90°
10 Scanning distance adjustment
11 Light/dark selector
12 Time control t_2 = OFF-delay
13 Time control t_1 = ON-delay
14 Time delay selector switch

Connection type

WT 24-2R 240

WT 24-2R 250

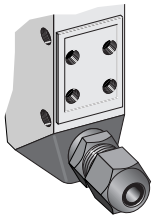

M16, terminals

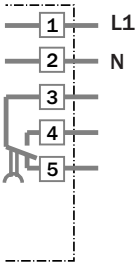

Technical data	WT 24-2	R 240	R 250
Scanning distance	100…1200 mm, adjustable	■	■
Light source[1], light type	LED, red light	■	■
Light spot diameter	Approx. 40 mm at 1200 mm	■	■
Supply voltage V_S	12…240 V DC[2], 24…240 V AC[3]	■	■
Power consumption without heating	< 2 VA	■	
Power consumption with heating	< 3 VA		■
Switching output	SPDT, isolated[4]	■	■
Max. switching voltage	250 V AC/120 V DC	■	■
Max. switching current	4 A/250 V AC, 4 A/24 V DC[5]	■	■
Max. switching capacity	AC: 1000 VA/DC: 100 W	■	■
Response time	≤ 10 ms	■	■
Max. switching frequency[6]	10/s	■	■
Time delay	Adjustable, 0.5…10 sec		■
Connection type	M16 screw fixing	■	■
VDE protection class[7]	⧈	■	■
Circuit protection[8]	A, C	■	■
Enclosure rating	IP 67	■	■
Ambient temperature T_A	Operation – 40 °C…+ 60 °C	■	■
	Storage – 40 °C…+ 75 °C	■	■
Weight	Approx. 330 g	■	■
Front lens heating			■
Housing material	Zinc die-cast housing	■	■

1) Average service life 100,000 h at $T_A = +25$ °C
2) Limit values
3) ± 10 %
4) Provide suitable spark suppression for inductive or capacitive loads
5) Usage category to EN 60947-1, AC-15, DC-13
6) With light/dark ratio 1:1
7) Reference voltage 250 V AC/DC
8) A = V_S connections reverse-polarity protected
C = Interference pulse suppression

Scanning distance

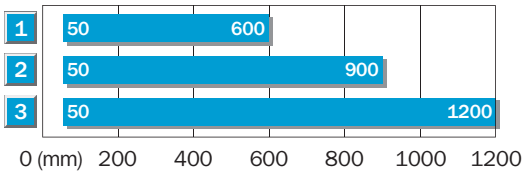

1	Scanning distance on black, 6% Remission
2	Scanning distance on gray, 18% Remission
3	Scanning distance on white, 90% Remission

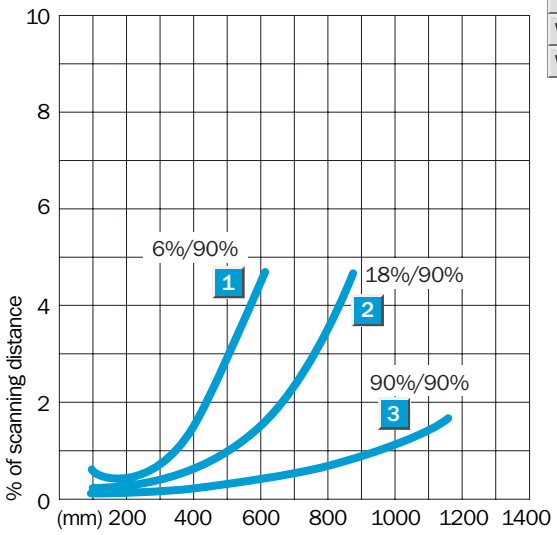

Order information

Type	Order no.
WT 24-2R 240	1 017 854
WT 24-2R 250	1 016 820

Scanning distance 100...2500 mm

Photoelectric proximity switches

- Robust metal housing
- Infrared light
- Background suppression, with very precise adjustment
- M16 screw fixing or equipment plug rotatable by 90°
- Front lens heating, time delay and pre-failure signalling output

CE c UL us LISTED

See chapter Accessories

Cables and connectors

Mounting systems

Special accessories

Dimensional drawing

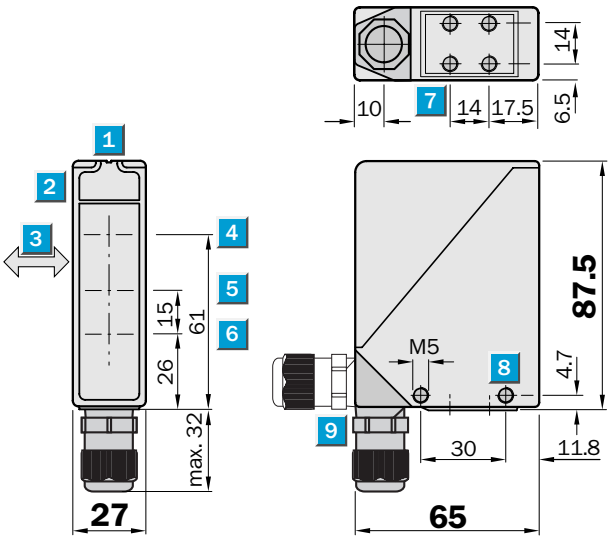

Adjustments possible

WT 24-2B 220	WT 24-2B 210
WT 24-2B 420	WT 24-2B 313
WT 24-2V 220	WT 24-2B 410
	WT 24-2V 510

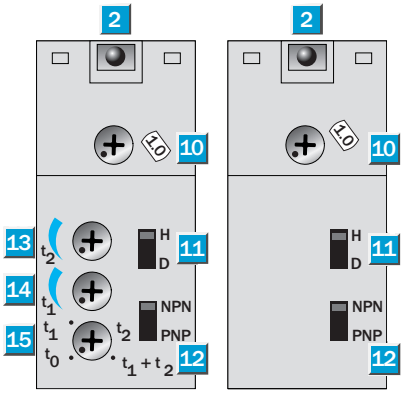

1 Alignment sight
2 LED signal strength indicator
3 Standard direction of the material being scanned
4 Centre of optical axis, sender
5 Centre of optical axis, receiver (close range)
6 Centre of optical axis, receiver (far range)
7 M5 threaded mounting hole, 6 mm deep
8 M5 threaded mounting hole, through-hole
9 M16 screw fixing and plug rotatable by 90°
10 Scanning distance adjustment
11 Light/dark selector
12 NPN/PNP selector
13 Time control t_2 = OFF-delay
14 Time control t_1 = ON-delay
15 Time delay selector switch

Connection types

WT 24-2B 210	WT 24-2V 220	WT 24-2B 313	WT 24-2B 410	WT 24-2V 510
WT 24-2B 220			WT 24-2B 420	

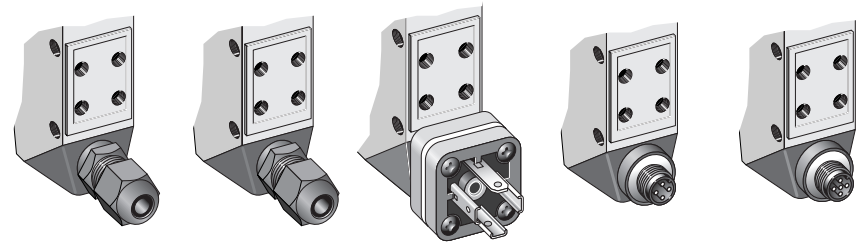

M16, terminals	M16, terminals	3-pin	4-pin, M12	5-pin, M12
1 L+	1 L+	brn 1 L+	brn 1 L+	brn 1 L+
2 M	2 M	blu 2 M	blu 3 M	blu 3 M
	3 Alarm	blk 3 Q/$\overline{Q}$	blk 4 Q/$\overline{Q}$	blk 4 Q/$\overline{Q}$
4 Q/$\overline{Q}$	4 Q/$\overline{Q}$			gra 5 Alarm
5 TE	5 TE		wht 2 TE	wht 2 TE

Technical data	WT 24-2	B 210	B 220	B 313	B 410	B 420	V 220	V 510
Scanning distance	100…2500 mm, adjustable	■	■	■	■	■	■	■
Light source[1], light type	LED, infrared light	■	■	■	■	■	■	■
Light spot diameter	Approx. 80 mm at 2500 mm	■	■	■	■	■	■	■
Supply voltage V_S	10…30 V DC[2]	■	■	■	■	■	■	■
Residual ripple[3]	< 5 V_{SS}	■	■	■	■	■	■	■
Current consumption[4]	≤ 50 mA	■		■	■			■
	≤ 70 mA, front lens heating		■			■	■	
Switching outputs	PNP or NPN, Q or $\overline{Q}$	■	■	■	■	■	■	■
Output current I_A max.	100 mA	■	■	■	■	■	■	■
Response time[5]	≤ 500 µs	■	■	■	■	■	■	■
Max. switching frequency[6]	1000/s	■	■	■	■	■	■	■
Pre-failure signalling output	Alarm, PNP						■	■
Time delay	Adjustable, 0.5…10 sec		■			■	■	
Test input "TE"	Sender switched off	■	■		■	■	■	■
Sender OFF	PNP or NPN: TE to 0 V	■	■	■	■	■	■	■
Connection types	M16 screw fixing	■	■				■	
	Plug			■	■	■		■
VDE protection class[7]	⧈	■	■	■	■	■	■	■
Circuit protection[8]	A, B, C	■	■	■	■	■	■	■
Enclosure rating	IP 67	■	■	■	■	■	■	■
Ambient temperature T_A	Operation – 40 °C…+ 60 °C	■	■	■	■	■	■	■
	Storage – 40 °C…+ 75 °C	■	■	■	■	■	■	■
Weight	Approx. 330 g	■	■	■	■	■	■	■
Front lens heating			■			■	■	
Housing material	Zinc die-cast housing	■	■	■	■	■	■	■

1) Average service life 100,000 h at $T_A = +25$ °C
2) Limit values
3) May not exceed or fall short of V_S tolerances
4) Without load
5) Signal transit time with resistive load
6) With light/dark ratio 1:1
7) Reference voltage 50 V DC
8) A = V_S connections reverse-polarity protected
B = Output Q and $\overline{Q}$ short-circuit protected
C = Interference pulse suppression

Scanning distance

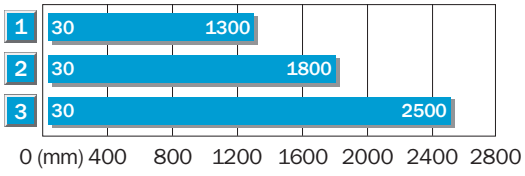

1	Scanning distance on black, 6 % Remission
2	Scanning distance on gray, 18 % Remission
3	Scanning distance on white, 90 % Remission

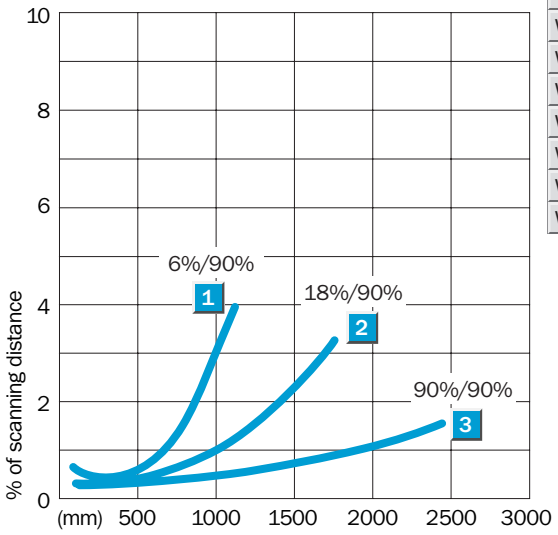

Order information

Type	Order no.
WT 24-2B 210	1 016 931
WT 24-2B 220	1 017 882
WT 24-2B 313	1 017 884
WT 24-2B 410	1 016 933
WT 24-2B 420	1 017 885
WT 24-2V 220	1 017 886
WT 24-2V 510	1 017 855

Scanning distance 100...2500 mm

Photoelectric proximity switches

- Universal supply voltage
- Robust metal housing
- Infrared light
- Background suppression, with very precise adjustment
- M16 screw fixing rotatable by 90°
- Front lens heating and time delay

CE c UL us LISTED

See chapter Accessories

Mounting systems

Special accessories

Dimensional drawing

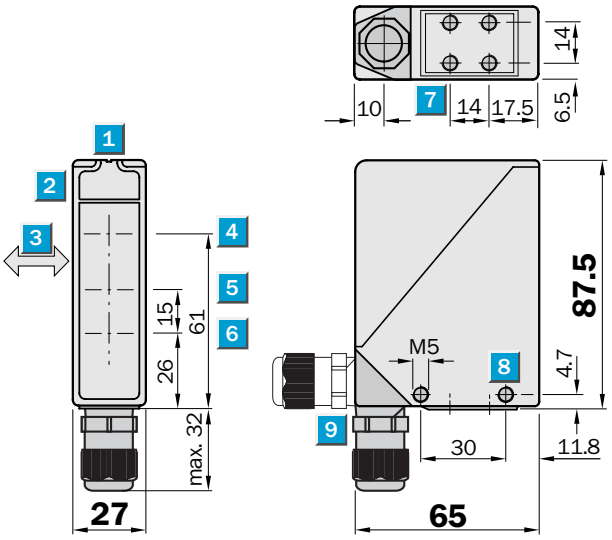

Adjustments possible

WT 24-2R 220 | WT 24-2R 210

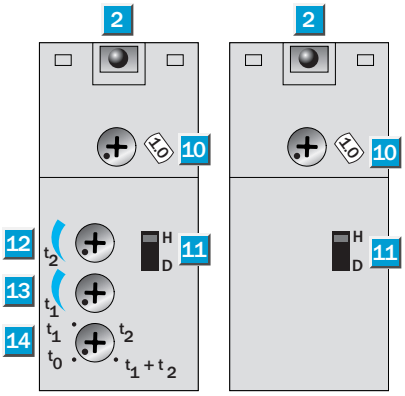

1 Alignment sight
2 LED signal strength indicator
3 Standard direction of the material being scanned
4 Centre of optical axis, sender
5 Centre of optical axis, receiver (close range)
6 Centre of optical axis, receiver (far range)
7 M5 threaded mounting hole, 6 mm deep
8 M5 threaded mounting hole, through-hole
9 M16 screw fixing rotatable by 90°
10 Scanning distance adjustment
11 Light/dark selector
12 Time control t_2 = OFF-delay
13 Time control t_1 = ON-delay
14 Time delay selector switch

Connection type

WT 24-2R 210

WT 24-2R 220

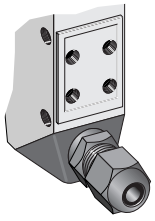

M16, terminals

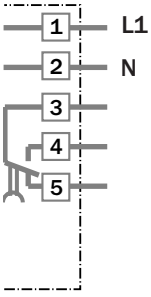

Technical data	WT 24-2	R 210	R 220
Scanning distance	100…2500 mm, adjustable	■	■
Light source[1], light type	LED, infrared light	■	■
Light spot diameter	Approx. 80 mm at 2500 mm	■	■
Supply voltage V_S	12…240 V DC[2], 24…240 V AC[3]	■	■
Power consumption without heating	< 2 VA	■	
Power consumption with heating	< 3 VA		■
Switching output	SPDT, isolated[4]	■	■
Max. switching voltage	250 V AC/120 V DC	■	■
Max. switching current	4 A/250 V AC, 4 A/24 V DC[5]	■	■
Max. switching capacity	AC: 1000 VA/DC: 100 W	■	■
Response time	≤ 10 ms	■	■
Max. switching frequency[6]	10/s	■	■
Time delay	Adjustable, 0.5…10 sec		■
Connection type	M16 screw fixing	■	■
VDE protection class[7]	⧈	■	■
Circuit protection[8]	A, C	■	■
Enclosure rating	IP 67	■	■
Ambient temperature T_A	Operation – 40 °C…+ 60 °C	■	■
	Storage – 40 °C…+ 75 °C	■	■
Weight	Approx. 330 g	■	■
Front lens heating			■
Housing material	Zinc die-cast housing	■	■

1) Average service life 100,000 h at $T_A = +25$ °C
2) Limit values
3) ± 10 %
4) Provide suitable spark suppression for inductive or capacitive loads
5) Usage category to EN 60947-1, AC-15, DC-13
6) With light/dark ratio 1:1
7) Reference voltage 250 V AC/DC
8) A = V_S connections reverse-polarity protected
C = Interference pulse suppression

Scanning distance

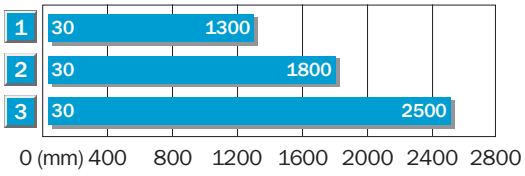

1	Scanning distance on black, 6 % Remission
2	Scanning distance on gray, 18 % Remission
3	Scanning distance on white, 90 % Remission

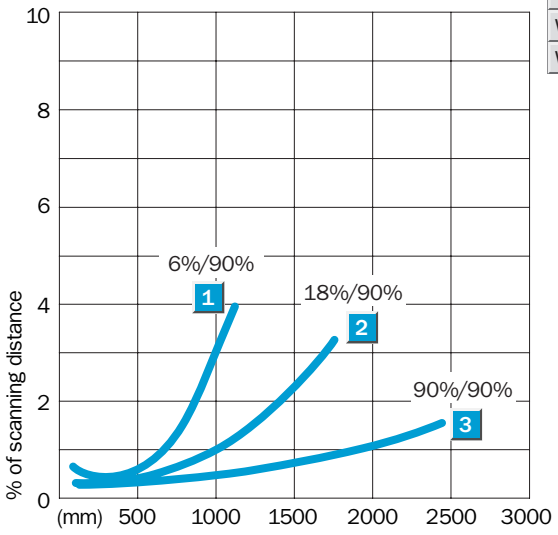

Order information

Type	Order no.
WT 24-2R 210	1 016 932
WT 24-2R 220	1 016 854

Scanning range 22 m

Photoelectric reflex switches

- Robust metal housing
- High operating reserve in visible red light
- M16 screw fixing or plug rotatable by 90°
- Front lens heating, time delay and pre-failure signalling output

CE c UL us LISTED

Dimensional drawing

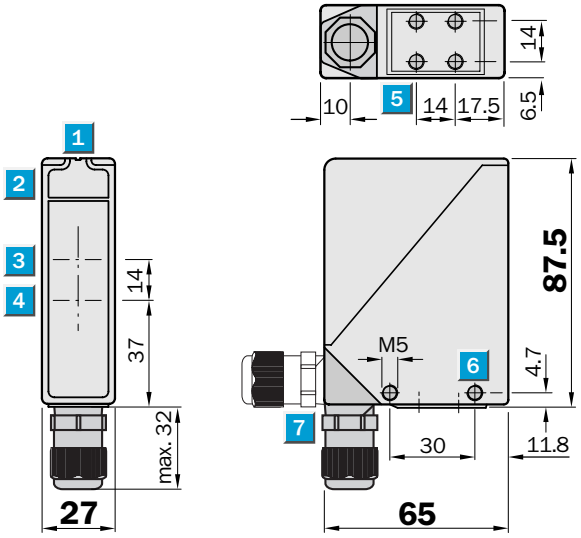

Adjustments possible

WL 24-2B 240	WL 24-2B 230
WL 24-2B 440	WL 24-2B 333
	WL 24-2B 430
	WL 24-2V 230
	WL 24-2V 530

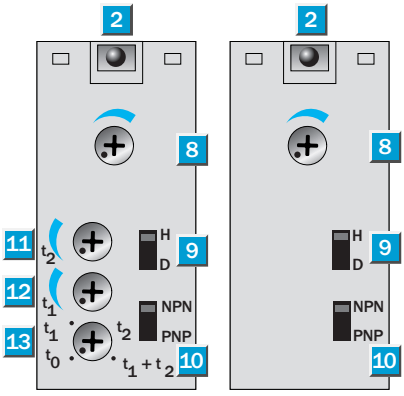

1 Alignment sight
2 LED signal strength indicator
3 Centre of optical axis, sender
4 Centre of optical axis, receiver
5 M5 threaded mounting hole, 6 mm deep
6 M5 threaded mounting hole, through-hole
7 M16 screw fixing or plug rotatable by 90°
8 Sensitivity adjustment
9 Light/dark selector
10 NPN/PNP selector
11 Time control t_2 = OFF-delay
12 Time control t_1 = ON-delay
13 Time delay selector switch

Connection types

WL 24-2B 230	WL 24-2V 230	WL 24-2B 333	WL 24-2B 430	WL 24-2V 530
WL 24-2B 240			WL 24-2B 440	

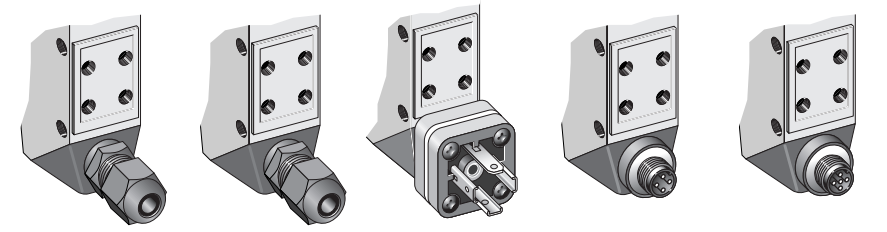

M16, terminals	M16, terminals	3-pin	4-pin, M12	5-pin, M12

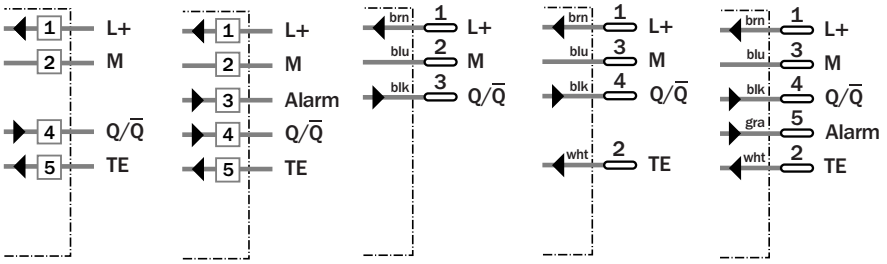

See chapter Accessories

- Cables and connectors
- Mounting systems
- Reflectors
- Special accessories

Technical data	WL 24-2	B 230	B 240	B 333	B 430	B 440	V 230	V 530
Scanning range, max. typ./on reflector	22 m/on PL 80 A	■	■	■	■	■	■	■
Sensitivity	Adjustable	■	■	■	■	■	■	■
Light source[1], light type	LED, red light	■	■	■	■	■	■	■
Light spot diameter	Approx. 250 mm at 15 m	■	■	■	■	■	■	■
Supply voltage V_S	10…30 V DC[2]	■	■	■	■	■	■	■
Residual ripple[3]	< 5 V_{SS}	■	■	■	■	■	■	■
Current consumption[4]	≤ 50 mA	■		■	■		■	■
	≤ 70 mA, front lens heating		■			■		
Switching outputs	PNP or NPN, Q or $\overline{Q}$	■	■	■	■	■	■	■
Output current I_A max.	100 mA	■	■	■	■	■	■	■
Response time[5]	≤ 500 µs	■	■	■	■	■	■	■
Max. switching frequency[6]	1000/s	■	■	■	■	■	■	■
Pre-failure signalling output	Alarm, PNP						■	■
Time delay	Adjustable, 0.5…10 sec		■			■		
Test input "TE"	Sender switched off	■	■		■	■	■	■
Sender OFF	PNP or NPN: TE to 0 V	■	■	■	■	■	■	■
Connection types	M16 screw fixing	■	■				■	
	Plug			■	■	■		■
VDE protection class[7]	⧈	■	■	■	■	■	■	■
Circuit protection[8]	A, B, C	■	■	■	■	■	■	■
Enclosure rating	IP 67	■	■	■	■	■	■	■
Ambient temperature T_A	Operation – 40 °C…+ 60 °C	■	■	■	■	■	■	■
	Storage – 40 °C…+ 75 °C	■	■	■	■	■	■	■
Weight	Approx. 330 g	■	■	■	■	■	■	■
Front lens heating			■			■		
Polarising filter		■	■	■	■	■	■	■
Housing material	Zinc die-cast housing	■	■	■	■	■	■	■

1) Average service life 100,000 h at T_A = + 25 °C
2) Limit values
3) May not exceed or fall short of V_S tolerances
4) Without load
5) Signal transit time with resistive load
6) With light/dark ratio 1:1
7) Reference voltage 50 V DC
8) A = V_S connections reverse-polarity protected
B = Output Q and $\overline{Q}$ short-circuit protected
C = Interference pulse suppression

Scanning range and operating reserve

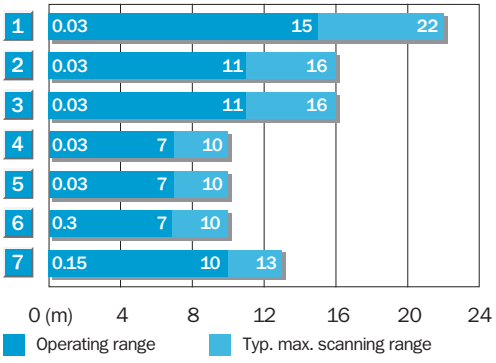

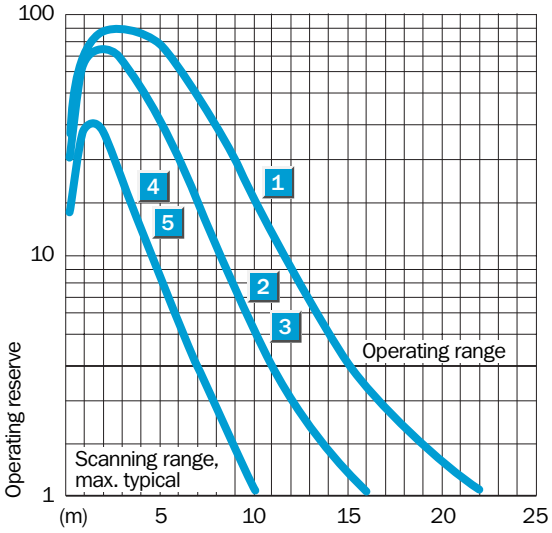

	Reflector type	Operating range
1	PL 80 A	0.03 to 15 m
2	PL 50 A	0.03 to 11 m
3	PL 40 A	0.03 to 11 m
4	PL 30 A	0.03 to 7 m
5	PL 20 A	0.03 to 7 m
6	Diamond Grade (20 cm x 20 cm)	0.3 to 7 m
7	C 110	0.15 to 10 m

Order information

Type	Order no.
WL 24-2B 230	1 015 852
WL 24-2B 240	1 017 859
WL 24-2B 333	1 017 878
WL 24-2B 430	1 017 860
WL 24-2B 440	1 017 879
WL 24-2V 230	1 017 880
WL 24-2V 530	1 017 881

Scanning range 22 m

Photoelectric reflex switches

- Universal supply voltage
- Robust metal housing
- Large operating reserve and visible red light
- M16 screw fixing rotatable by 90°
- Front lens heating and time delay

CE c UL us LISTED

Dimensional drawing

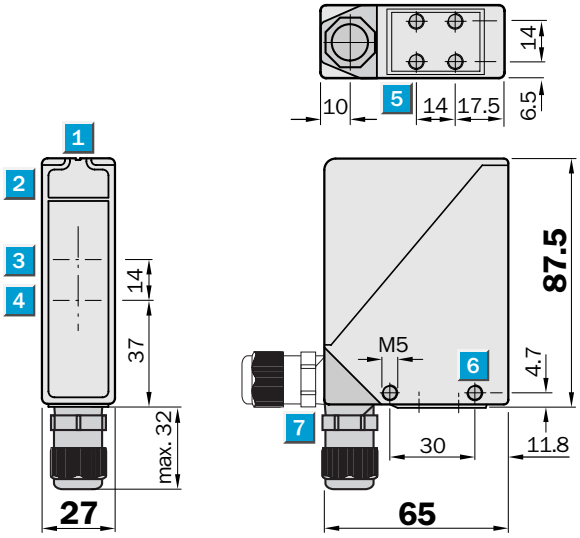

Adjustments possible

WL 24-2R 240 | WL 24-2R 230

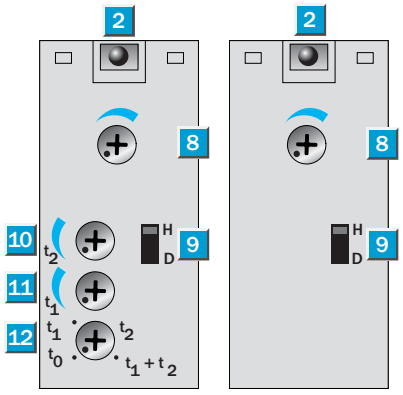

1. Alignment sight
2. LED signal strength indicator
3. Centre of optical axis, sender
4. Centre of optical axis, receiver
5. M5 threaded mounting hole, 6 mm deep
6. M5 threaded mounting hole, through-hole
7. M16 screw fixing rotatable by 90°
8. Sensitivity adjustment
9. Light/dark selector
10. Time control t_2 = OFF-delay
11. Time control t_1 = ON-delay
12. Time delay selector switch

Connection type

WL 24-2R 230
WL 24-2R 240

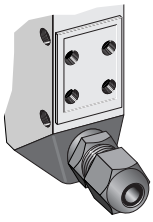

M16, terminals

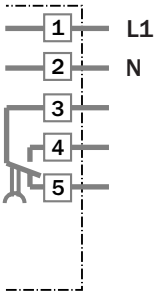

See chapter Accessories

Mounting systems
Reflectors
Special accessories

Technical data	WL 24-2	R 230	R 240
Scanning range, max. typ./on reflector	22 m/on PL 80 A	■	■
Sensitivity	Adjustable	■	■
Light source[1], light type	LED, red light	■	■
Light spot diameter	Approx. 250 mm at a distance of 15 m	■	■
Supply voltage V_S	12…240 V DC[2], 24…240 V AC[3]	■	■
Power consumption without heating	< 2 VA	■	
Power consumption with heating	< 3 VA		■
Switching output	SPDT, isolated[4]	■	■
Max. switching voltage	250 V AC/120 V DC	■	■
Max. switching current	4 A/250 V AC, 4 A/24 V DC[5]	■	■
Max. switching capacity	AC: 1000 VA/DC: 100 W	■	■
Response time[6]	≤ 10 ms	■	■
Max. switching frequency[7]	10/s	■	■
Time delay	Adjustable, 0.5…10 sec		■
Connection type	M16 screw fixing	■	■
VDE protection class[8]	⧈	■	■
Circuit protection[9]	A, C	■	■
Enclosure rating	IP 67	■	■
Ambient temperature T_A	Operation – 40 °C…+ 60 °C	■	■
	Storage – 40 °C…+ 75 °C	■	■
Weight	Approx. 330 g	■	■
Front lens heating			■
Polarising filter		■	■
Housing material	Zinc die-cast housing	■	■

1) Average service life 100,000 h at T_U = + 25 °C
2) Limit values
3) ± 10 %
4) Provide suitable spark suppression for inductive or capacitive loads
5) Usage category to EN 60947-1, AC-15, DC-13
6) Signal transit time with resistive load
7) With light/dark ratio 1:1
8) Reference voltage 250 V UC
9) A = V_S connections reverse-polarity protected
C = Interference pulse suppression

Operating range and operating reserve

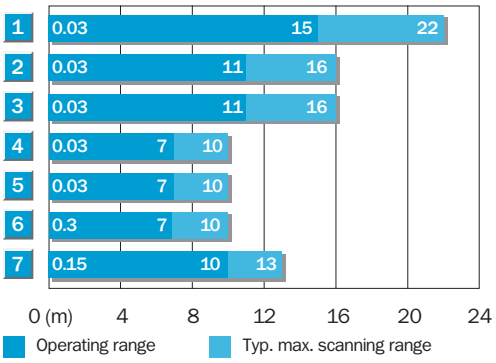

Reflector type		Operating range
1	PL 80 A	0.03 to 15 m
2	PL 50 A	0.03 to 11 m
3	PL 40 A	0.03 to 11 m
4	PL 30 A	0.03 to 7 m
5	PL 20 A	0.03 to 7 m
6	Diamond Grade (20 cm x 20 cm)	0.3 to 7 m
7	C 110	0.15 to 10 m

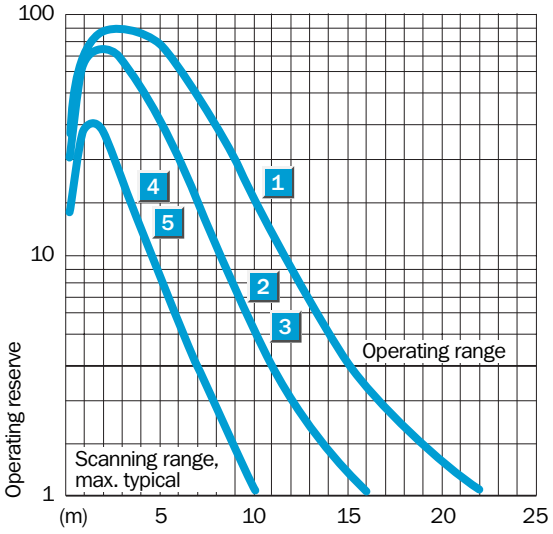

Order information

Type	Order no.
WL 24-2R 230	1 017 857
WL 24-2R 240	1 017 858

Scanning range 0...60 m

Through-beam photoelectric switches

- Robust metal housing
- Large operating reserve and visible red light
- M16 screw fixing or plug rotatable by 90°
- Front lens heating, time delay and pre-failure signalling output

Dimensional drawing

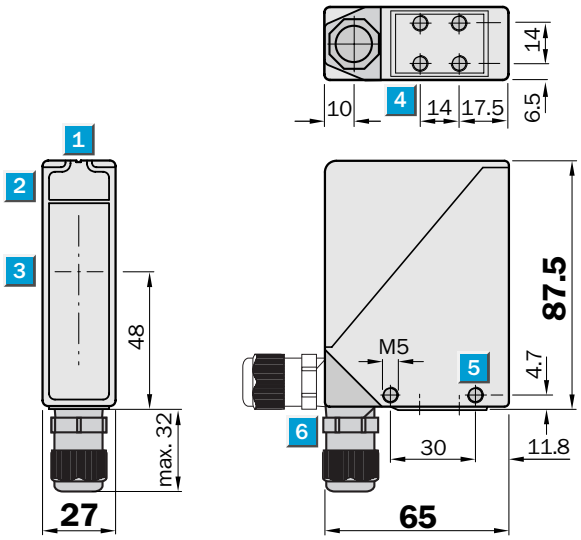

Adjustments possible

WS/WE 24-2B 240	WS/WE 24-2B 230
WS/WE 24-2B 440	WS/WE 24-2B 333
	WS/WE 24-2B 430
	WS/WE 24-2V 530

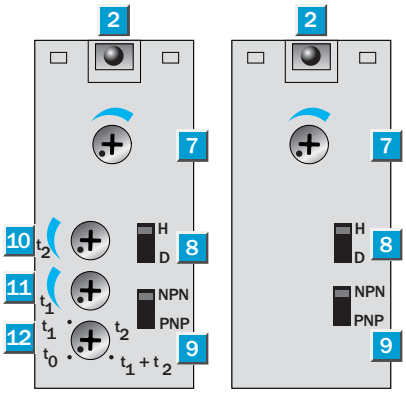

1. Alignment sight
2. LED signal strength indicator
3. Centre of optical axis
4. M5 threaded mounting hole, 6 mm deep
5. M5 threaded mounting hole, through-hole
6. M16 screw fixing and plug rotatable by 90°
7. Sensitivity adjustment
8. Light/dark selector
9. NPN/PNP selector
10. Time control t_2 = OFF-delay
11. Time control t_1 = ON-delay
12. Time delay selector switch

Connection types

WS/WE 24-2B 230	WS/WE 24-2B 333	WS/WE 24-2B 430	WS/WE 24-2V 530
WS/WE 24-2B 240		WS/WE 24-2B 440	

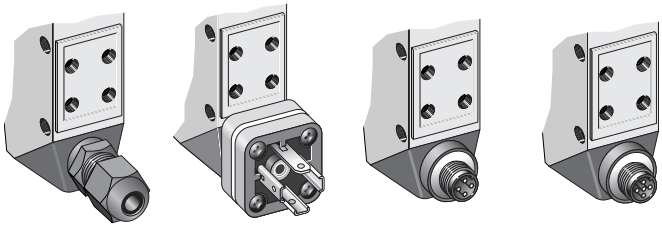

M16, terminals	3-pin	4-pin, M12	5-pin, M12

Sender

M16, terminals	3-pin	4-pin, M12	5-pin, M12
1 L+	brn 1 L+	brn 1 L+	brn 1 L+
2 M	blu 2 M	blu 3 M	blu 3 M
5 TE	blk 3 TE	wht 2 TE	wht 2 TE

Receiver

M16, terminals	3-pin	4-pin, M12	5-pin, M12
1 L+	brn 1 L+	brn 1 L+	brn 1 L+
2 M	blu 2 M	blu 3 M	blu 3 M
4 Q/$\overline{Q}$	blk 4 Q/$\overline{Q}$	blk 4 Q/$\overline{Q}$	blk 4 Q/$\overline{Q}$
			gra 5 Alarm

See chapter Accessories
- Cables and connectors
- Mounting systems
- Special accessories

Technical data	WS/WE 24-2	B 230	B 240	B 333	B 430	B 440	V 530
Scanning range, max. typical	0…60 m	■	■	■	■	■	■
Sensitivity	Adjustable	■	■	■	■	■	■
Light source[1], light type	LED, red light	■	■	■	■	■	■
Light spot diameter	Approx. 700 mm at of 50 m	■	■	■	■	■	■
Angle of dispersion/reception	1°/2.5°	■	■	■	■	■	■
Supply voltage V_S	10…30 V DC[2]	■	■	■	■	■	■
Residual ripple[3]	< 5 V_{SS}	■	■	■	■	■	■
Current consumption[4]							
Sender without heating	≤ 50 mA	■		■	■		■
Sender with heating	≤ 70 mA		■			■	
Receiver without heating	≤ 40 mA	■		■	■		■
Receiver with heating	≤ 60 mA		■			■	
Switching outputs	PNP or NPN, Q or $\overline{Q}$	■	■	■	■	■	■
Output current I_A max.	100 mA	■	■	■	■	■	■
Response time[5]	≤ 500 µs	■	■	■	■	■	■
Max. switching frequency[6]	1000/s	■	■	■	■	■	■
Pre-failure signalling output	Alarm, PNP						■
Time delay	Adjustable, 0.5…10 sec		■			■	
Test input "TE"	Sender switched off	■	■	■	■	■	■
Sender OFF	PNP or NPN: test input to 0 V	■	■	■	■	■	■
Connection types	Plug			■	■	■	■
	M16 screw fixing	■	■				
VDE protection class[7]	⧈	■	■	■	■	■	■
Circuit protection[8]	A, B, C	■	■	■	■	■	■
Enclosure rating	IP 67	■	■	■	■	■	■
Ambient temperature T_A	Operation – 40 °C…+ 60 °C	■	■	■	■	■	■
	Storage – 40 °C…+ 75 °C	■	■	■	■	■	■
Weight	Approx. 330 g	■	■	■	■	■	■
Front lens heating			■			■	
Housing material	Zinc die-cast housing	■	■	■	■	■	■

1) Average service life 100,000 h at T_A = + 25 °C
2) Limit values
3) May not exceed or fall short of V_S tolerances
4) Same values for WS and WE, without load
5) Signal transit time with resistive load
6) With light/dark ratio 1:1
7) Reference voltage 50 V DC
8) A = V_S connections reverse-polarity protected
B = Output Q and $\overline{Q}$ short-circuit protected
C = Interference pulse suppression

Operating range and operating reserve

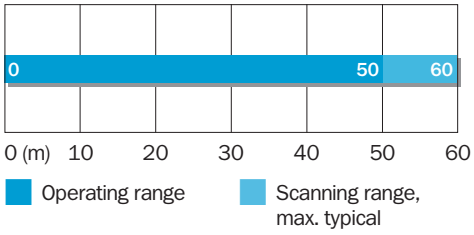

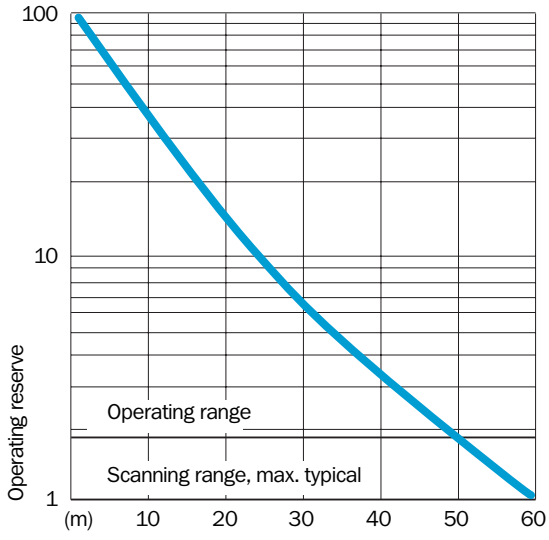

Order information

Type	Order no.
WS/WE 24-2B 230	1 017 861
WS/WE 24-2B 240	1 017 862
WS/WE 24-2B 333	1 017 874
WS/WE 24-2B 430	1 017 853
WS/WE 24-2B 440	1 017 875
WS/WE 24-2V 530	1 017 877

Scanning range 0...60 m

Through-beam photoelectric switches

- Universal supply voltage
- Robust metal housing
- Large operating reserve and visible red light
- M16 screw fixing rotatable by 90°
- Front lens heating and time delay

Dimensional drawing

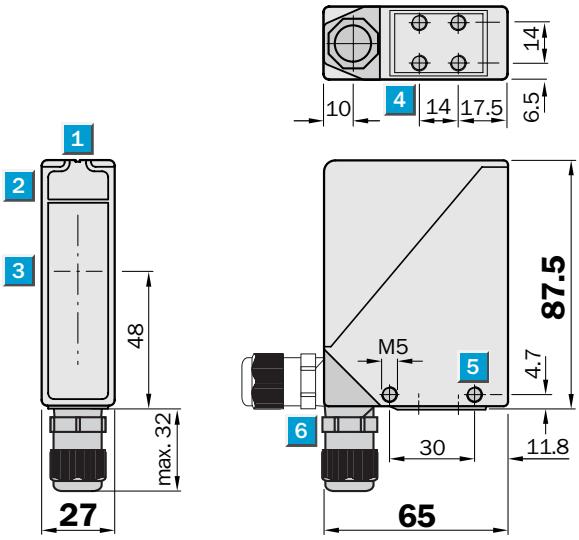

Adjustments possible

WS/WE 24-2R 240 | WS/WE 24-2R 230

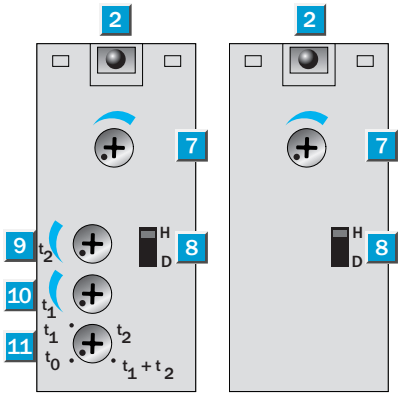

1 Alignment sight
2 LED signal strength indicator
3 Centre of optical axis
4 M5 threaded mounting hole, 6 mm deep
5 M5 threaded mounting hole, through-hole
6 M16 screw fixing rotatable by 90°
7 Sensitivity adjustment
8 Light/dark selector
9 Time control t_2 = OFF-delay
10 Time control t_1 = ON-delay
11 Time delay selector switch

Connection type

WS/WE 24-2R 230
WS/WE 24-2R 240

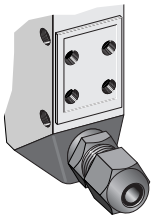

M16, terminals

See chapter Accessories
Mounting systems
Special accessories

Sender

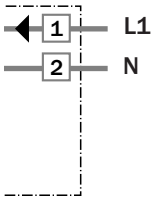

Receiver

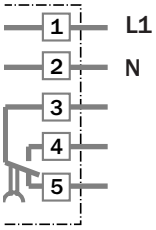

Technical data	WS/WE 24-2	R 230	R 240
Scanning range, max. typical	0…60 m	■	■
Sensitivity	Adjustable	■	■
Light source[1], light type	LED, red light	■	■
Light spot diameter	Approx. 700 mm at 50 m	■	■
Angle of dispersion/reception	1°/2.5°	■	■
Supply voltage V_S	12…240 V DC[2], 24…240 V AC[3]	■	■
Power consumption without heating	< 2 VA	■	
Power consumption with heating	< 3 VA		■
Switching output	SPDT, isolated[4]	■	■
Max. switching voltage	250 V AC/120 V DC	■	■
Max. switching current	4 A/250 V AC, 4 A/24 V DC[5]	■	■
Max. switching capacity	AC: 1000 VA/DC: 100 W	■	■
Response time	≤ 10 ms	■	■
Max. switching frequency[6]	10/s	■	■
Time delay	Adjustable, 0.5…10 sec		■
Connection type	M16 screw fixing	■	■
VDE protection class[7]	⧈	■	■
Circuit protection[8]	A, C	■	■
Enclosure rating	IP 69K	■	■
		■	■
Ambient temperature T_A	Operation – 40 °C…+ 60 °C	■	■
	Storage – 40 °C…+ 75 °C	■	■
Weight	Approx. 330 g	■	■
Front lens heating			■
Housing material	Zinc die-cast housing	■	■

1) Average service life 100,000 h at T_U = + 25 °C
2) Limit values
3) ± 10 %
4) Provide suitable spark suppression for inductive or capacitive loads
5) Usage category to EN 60947-1, AC-15, DC-13
6) With light/dark ratio 1:1
7) Reference voltage 250 V UC
8) A = V_S connections reverse-polarity protected
C = Interference pulse suppression

Operating range and function reserve

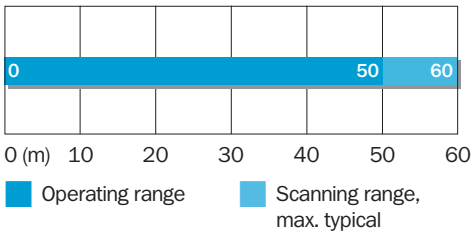

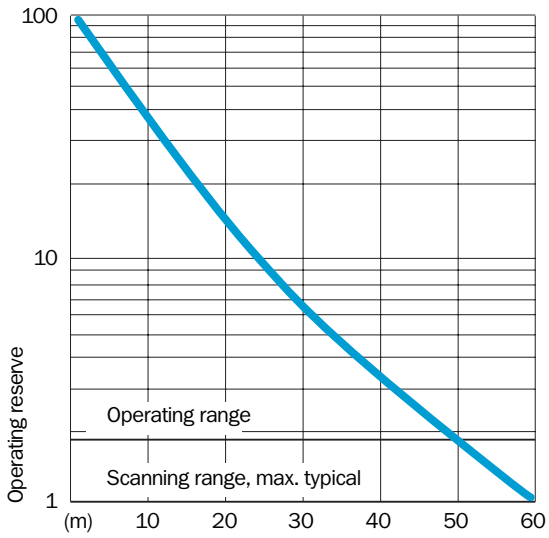

Order information

Type	Order no.
WS/WE 24-2R 230	1 017 863
WS/WE 24-2R 240	1 017 864